STANPRO

Project: _____ Type: _____

Drawn by: _____ Catalogue #: _____ Date: _____

Series Spec Sheet

LPDL

LED 3" SQUARE LOW PROFILE DOWNLIGHT

LPDL™ gives you all the flexibility you need during installation, especially in confined area or when facing constraints such as wood beams, ceiling joist or air ducts. The driver is mounted separately from the light source which allows the luminaire profile to be less than 1" thick! This 3" LPDL is perfect for any application.

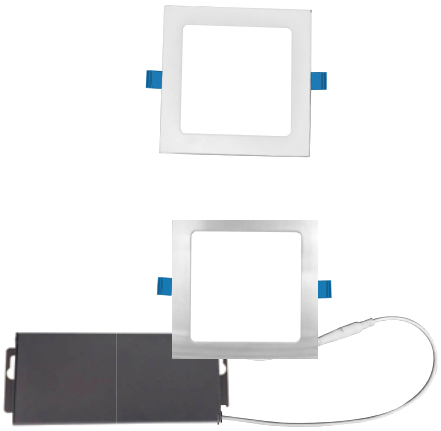

FEATURES AND SPECIFICATIONS

- **Construction**

  Finishing
  - White and Brushed Nickel
  - 110° beam
  - 3" Square

  Mounting
  - LED module with LED driver easily installed with quick connect wire
  - Torsion spring mounting clips

- **Technical specifications**
  - Phase-cut dimming
  - Color temperature 3 000 and 4 000 K
  - Operating temperature: -20 °C to 45 °C (-4 °F to 113 °F)
  - IC certified
  - Suitable for damp location
  - FT4 rating
  - Air tight

- **Compliances**
  - cETLus
  - Energy Star

7 yrs warranty

quick ship

LED fixture

dimmable fixture

airtight

damp location

IC rated

ICES 005

quick connect

Intertek

ENERGY STAR

OVERVIEW

Light source	LED
Watts (W)	7
Lumen output (lm)	430 and 450
Efficacy (lm/W)	60 - 65
Color temperature (K)	3 000, 4 000
CRI	80

2233 rue de l'Aviation, Dorval, QC H9P 2X6

514.342.1199, 1.800.361.6965 • 514.807.3011 • www.standardpro.com

STANPRO

QUICK SHIP AND TECHNICAL SPECIFICATION TABLE [1]

S1 - Small junction box

Order code	Model number	Watts (W)	Volts (V AC)	Color temp. (K)[2]	Lumen output (lm)[3]	Efficacy (lm/W)	CRI	Life L70 (hrs)[4]	Tested hours LM-80 (hrs)[4]	Beam angle (°)	Cable rating	Finish	Power factor	THD (%)	Traditional equivalent (W)	Case qty (master)
3" Square																
65855	LPDL3/SQR/7W/30K/WH/STD	7	120	3 000	430	61	80	50 000	9 000	110	FT4	White	>0.9	<40	50	24
65856	LPDL3/SQR/7W/30K/BN/STD	7	120	3 000	430	61	80	50 000	9 000	110	FT4	Brushed nickel	>0.9	<40	50	24
65857	LPDL3/SQR/7W/40K/WH/STD	7	120	4 000	450	64	80	50 000	9 000	110	FT4	White	>0.9	<40	50	24

[1] **QUICK SHIP:** Product availability is subject to change without notice. Please contact your Stanpro customer service representative to confirm inventory levels at time of order.
[2] Typical color temperature range: +/- 5 %.
[3] Lumen values are derived from Energy Star reported data. Initial lumens range: +/- 10 %.
[4] Life hours are derived from IESNA LM-80-08 testing report and projected per IESNA TM-21-11 extrapolations.

ACCESSORIES (order separately)

Order code	Model number	Type	Opening diameter (in)	Case qty (master)
66049	ACC/MPLATE/3.625IN/SQR/STD	Square mounting plate	3 5/8	96
66056	ACC/MPLATE/3.625IN/ADJ/STD	Adjustable mounting plate	3 5/8	96
66142	ACC/3/VAPOR BARRIER/STD	Vapor barrier extender	3 5/8	50
66820	ACC/MPLATE/3.625IN/HANG.BARS/STD	Mounting plate with hanger bars	3 5/8	25
64264	LPDL/ACC/6FT/EXTCABLE/STD	6' Extension cord	-	96

COMPATIBLE DIMMERS

Brand	Product type & dimmer model number
LEGRAND	HCL453P
COOPER	AAL06, DAL06P, SLC03P
LEVITON	6674, DSL06-1LZ, IPE04-1LZ
LUTRON	AYCL-253P, CTCL-153P, DVCL-153P, DVCL-253P, DVELV-300P, MACL-153P, NTELV-600, SELV-300P

NOTE: The above table shows dimmers that have been tested and have demonstrated proper operation under normal conditions. Each installation being unique, various factors such as load, common neutrals or other electrical products on the circuit can, in certain instances, cause variance in system performance. Read and comply to the dimmer installation instructions. Consult dimming system manufacturer for additional support in operation. Standard recommends to use dimmers designed to work with LED products. Older dimmers designed for incandescent products may cause erratic operation. Some dimmers may require more than one product for stable operation. The maximum number of products is determined by the dimmer wattage rating with LEDs. Be careful, these dimmers have different ratings depending on the product type. Again, refer to the dimmer installation instructions.

DIMENSIONS

3"

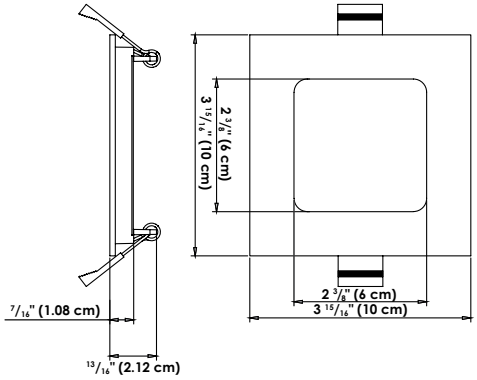

3" LED DRIVER

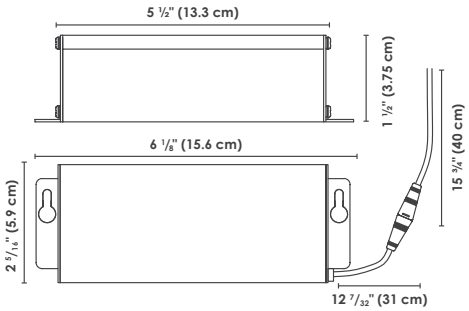

Data is based upon tests performed in a controlled environment. Actual performance can vary depending on operating conditions.
All products are subject to change or may be discontinued any time without notice.

2233 rue de l'Aviation, Dorval, QC H9P 2X6
514.342.1199, 1.800.361.6965 • 514.807.3011 • www.standardpro.com

PHOTOMETRIC DATA[1]

65855 • LPDL3/SQR/7W/30K/WH/STD • 471.7 lm

Polar candela distribution

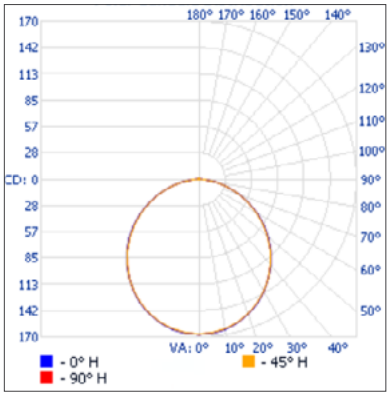

Zonal lumen summary

Zone	Lumens	% Fixture
0-30	128.9	27.3%
0-40	210.5	44.6%
0-60	370.5	78.5%
60-90	100.8	21.4%
70-100	43.3	9.2%
90-120	0.2	0%
0-90	471.3	99.9%
90-180	0.4	0.1%
0-180	471.7	100%

Illuminance at a distance

	Center beam fc	Beam width	
1.7'	57.9	5.0'	5.0'
3.3'	15.4	9.7'	9.6'
5.0'	6.69	14.7'	14.6'
6.7'	3.72	19.7'	19.6'
8.3'	2.43	24.3'	24.3'
10.0'	1.67	29.3'	29.2'

Vert. spread: 111.4°
Horiz. spread: 111.2°

65857 • LPDL3/SQR/7W/40K/WH/STD • 1 046.8 lm

Polar candela distribution

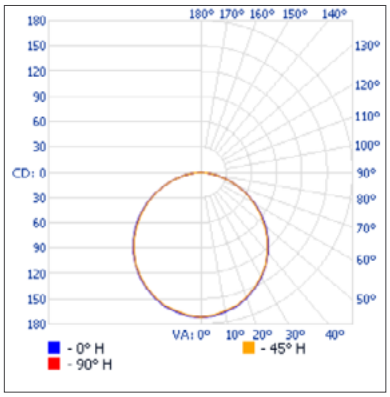

Zonal lumen summary

Zone	Lumens	% Fixture
0-30	132.1	27.3%
0-40	215.8	44.7%
0-60	379.8	78.6%
60-90	103.4	21.4%
70-100	44.3	9.2%
90-120	0.1	0%
0-90	483.2	100%
90-180	0.1	0%
0-180	483.2	100%

Illuminance at a distance

	Center beam fc	Beam width	
1.7'	59.4	5.0'	5.0'
3.3'	15.8	9.7'	9.6'
5.0'	6.86	14.7'	14.6'
6.7'	3.82	19.7'	19.5'
8.3'	2.49	24.4'	24.2'
10.0'	1.72	29.4'	29.2'

Vert. spread: 111.6°
Horiz. spread: 111.1°

[1] Complete IES files available on our website.

Data is based upon tests performed in a controlled environment. Actual performance can vary depending on operating conditions.
All products are subject to change or may be discontinued any time without notice.

2233 rue de l'Aviation, Dorval, QC H9P 2X6
514.342.1199, 1.800.361.6965 • 514.807.3011 • www.standardpro.com