PARTS LIST

MODEL : FV-08VQ2

NO.	PART NO.	PART NAME	Qty	NO.	PART NO.	PART NAME	Qty
1	FFV1600037S	Frame Assembly	1				
2	FFV0000004H	Adapter Assembly	1				
3	FFV0790003H	Casing	1				
4	FFV5510013H	Shutter	1				
5	FFV5600002H	Shutter Weight	1				
6	FFV0710011H	Coupling Rod	1				
7	FFV4610002H	Packing	4				
8	FFV6710002H	Wiring Cover	1				
9	XTT4+12FU	Cover Set Screw	1				
10	FFV4300026H	Orifice Assembly	1				
11	FFV0420001H	Bracket	1				
12	FFV3700052H	Motor Assembly	1				
13	XTT4+08FU	Motor Set Screw	2				
14	FFV0880001H	Connecting Wire	1				
15	FFV0750013H	Condenser	1				
16	FFV0400033H	Blade	1				
17	FFV0410002H	Blade Fixing Nut	1				
18	FFV5610001H	Spring Washer	1				
19	FFV6700002H	Washer	1				
20	XTT4+08FU	Orifice Set Screw	2				
21	XTT4+12FU	Casing Set Screw	3				
22	FFV3400011H	Louver Assembly	1				
23	FFV0010004H	Accessory set	1				
24	FFV1620001H	Frame Attachment	2				
25	FFV0020001H	Attachment Screw	2				
26	FFV5710010S	Suspension Plate 1	1				
27	FFV0420012S	Bracket Cover	1				
28	FFV5710011S	Suspension Plate 2	1				
29	FFV7000018S	Truss Tap Screw	4				

Parts Identification

Ceiling-Mount Types
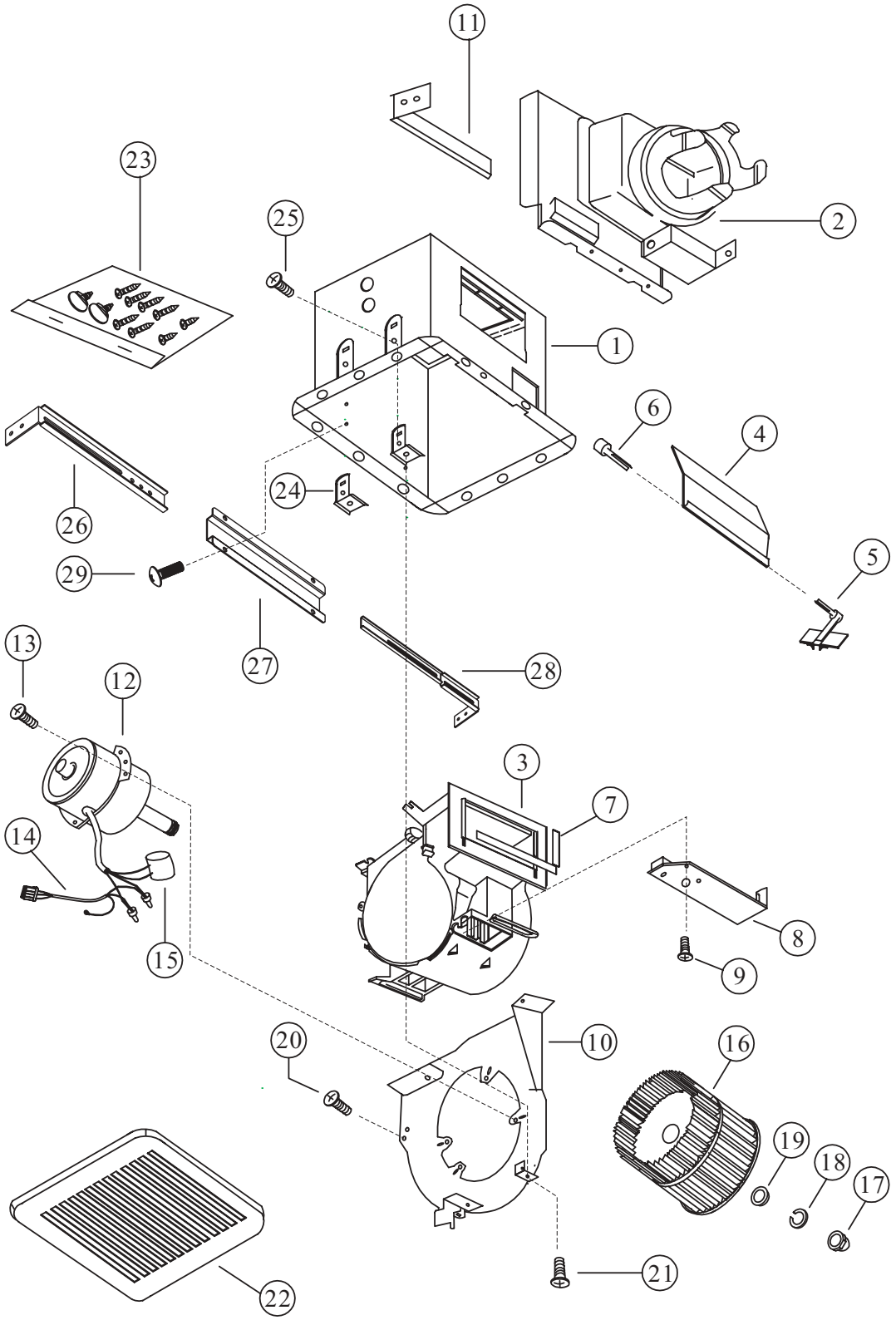
FV-05/07/08/11VQ2