21D64-1

Ignitor Strength Demonstration

NITRIDE UPGRADE KIT

Designed to Replace Silicon Carbide Ignitors with Sturdier Nitride Design

FEATURES

- No need to replace existing module.
- Replaces most silicon carbide ignitors.
- Includes universal ignitor mounting bracket.
- Super tough nitride ignitor construction.
- Easy ignitor replacement.

SPECIFICATIONS

Operating Temperature	-40° to +176°F (-40 to +80°C)
Humidity	95% non-condensing
Input Voltage	120VAC @ 1.2 amps nominal, 7 amps inrush at 50/60 Hz

TECHNICAL HELP

Wiring Diagrams . . . . . see below and pages 200-201

	Model Number	Description
NEW!	21D64-1	Kit includes nitride ignitor, power supply module, universal mounting bracket, connection harness and furnace label

TYPICAL SILICON CARBIDE SYSTEM WIRING DIAGRAM

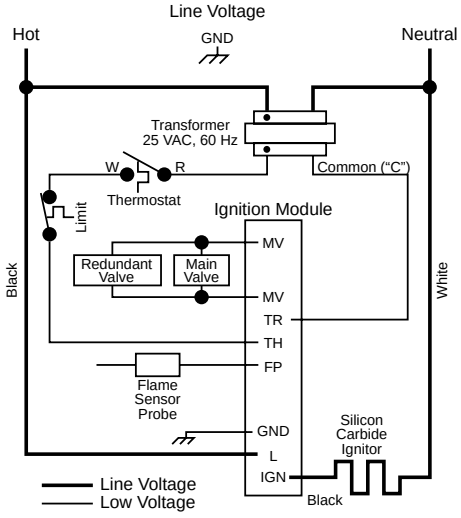

BEFORE

Terminal Legend

MV – Main Valve
TR – Transformer
TH – Thermostat
FP – Flame Probe
GND – Burner Ground
L – Line
IGN – Ignitor

TYPICAL SYSTEM WITH NITRIDE IGNITOR UPGRADE KIT

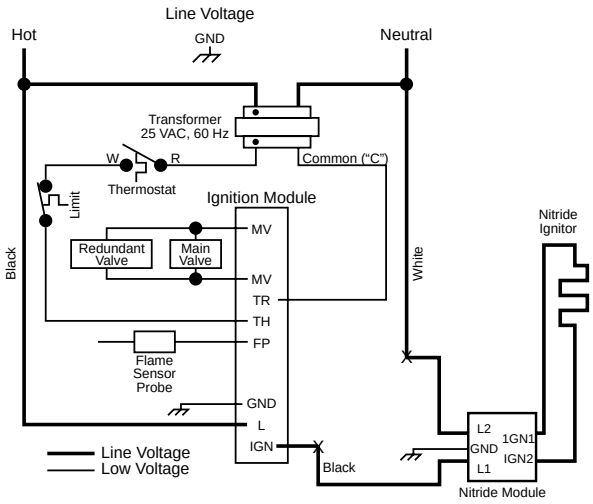

AFTER